J-ABR215

Manuel utilisateur

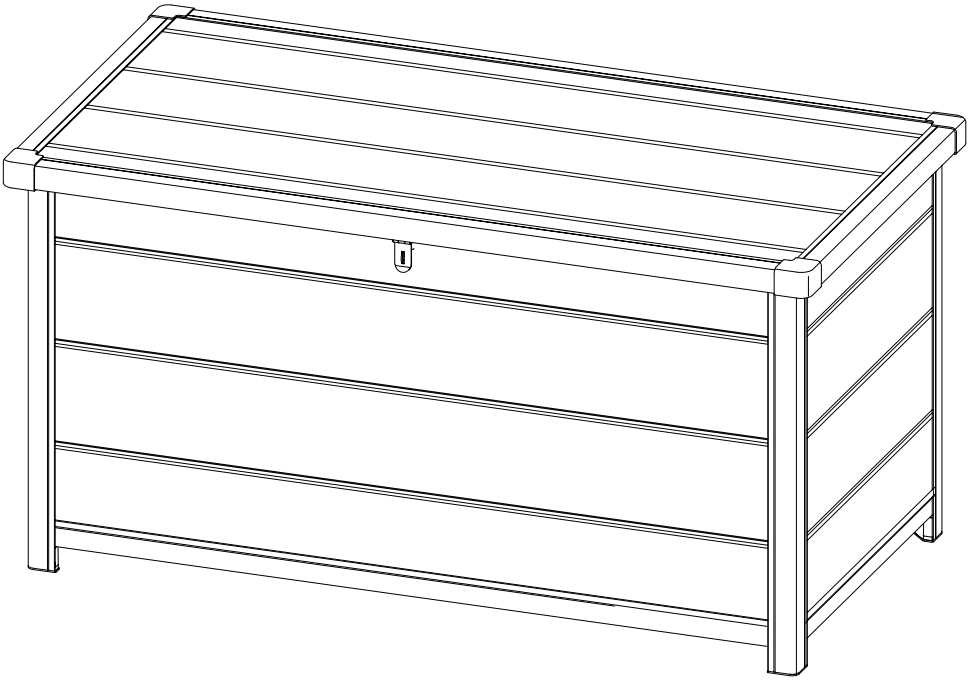

Garantie contre tout défaut ou manquant constaté au déballage du produit

Dimensions 1.25m x 0.62m

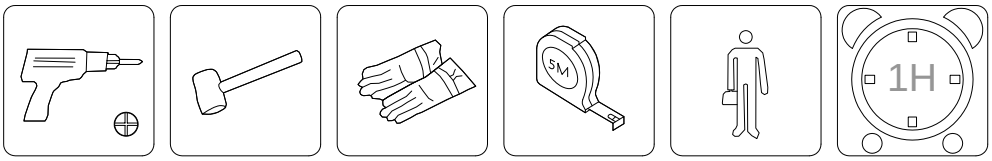

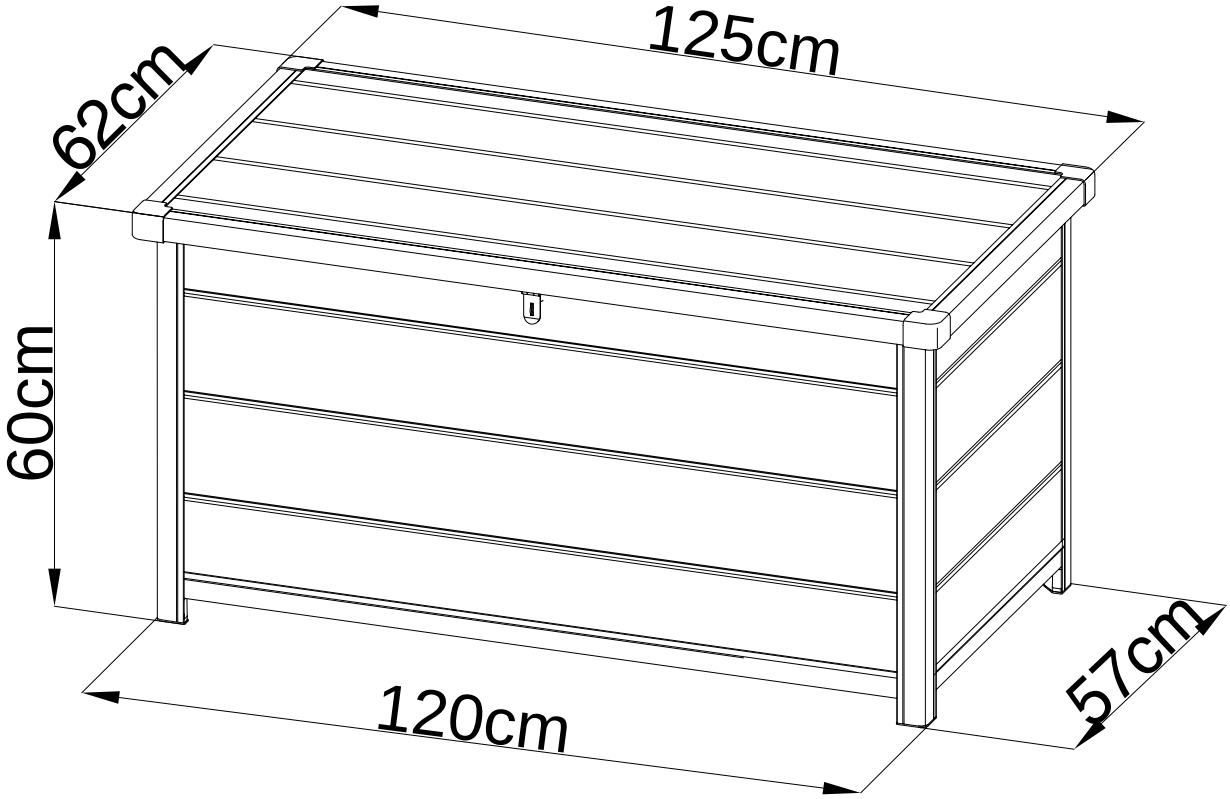
125cm
62cm
60cm
120cm
57cm

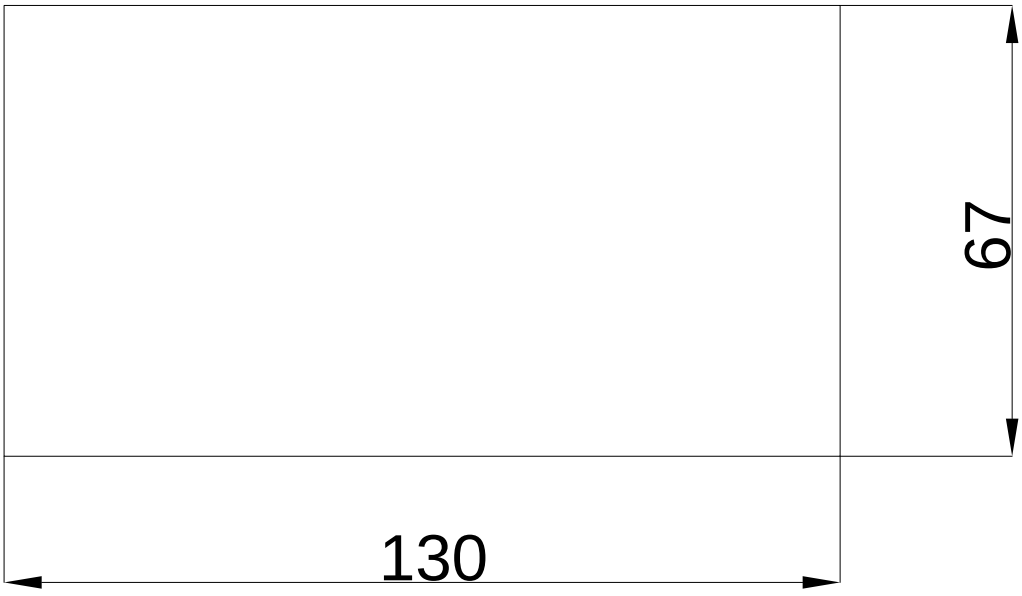
67
130

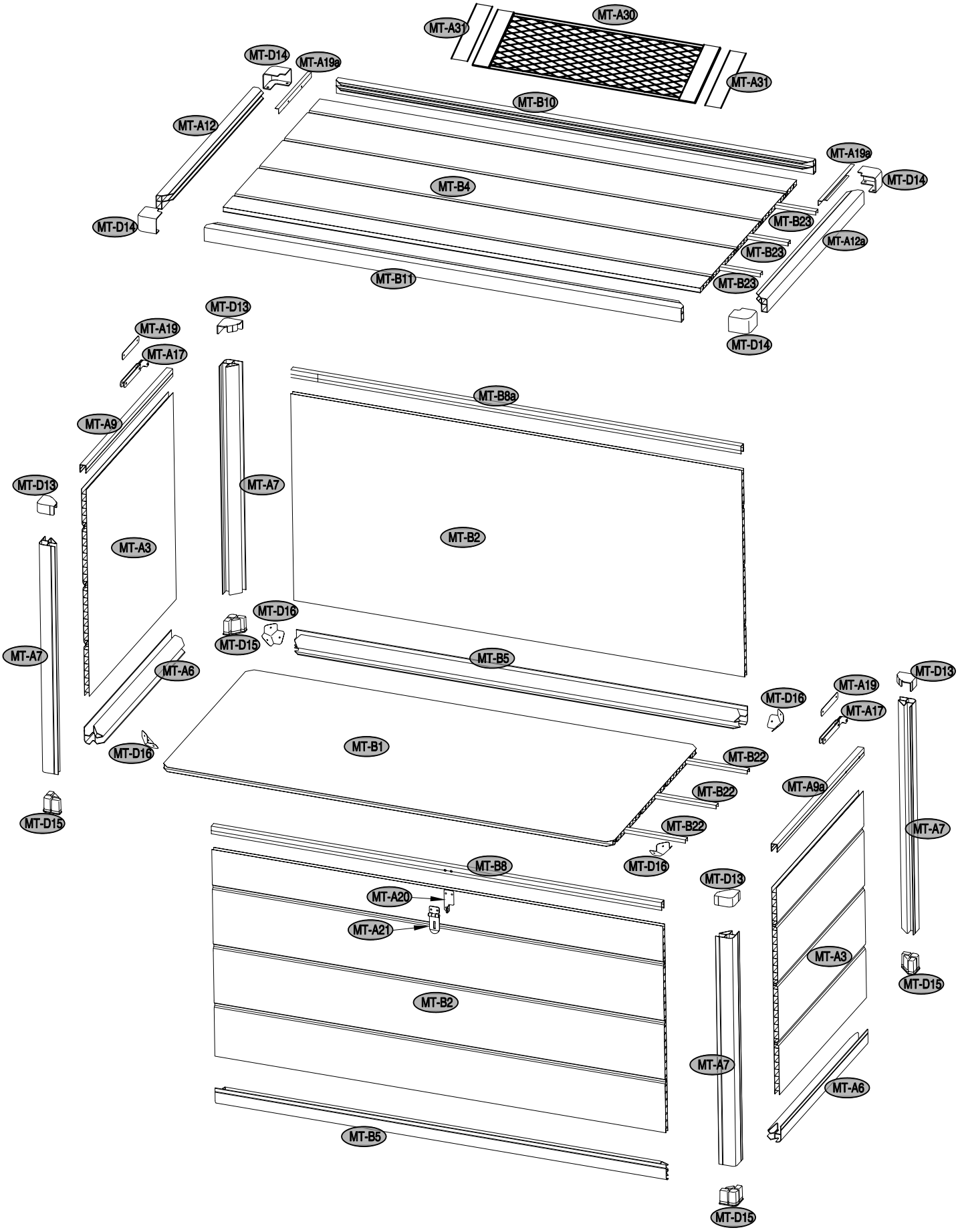
MT-A30
MT-A31
MT-A31
MT-D14
MT-A19a
MT-B10
MT-A12
MT-A19a
MT-D14
MT-B4
MT-D14
MT-B23
MT-A12a
MT-B23
MT-B11
MT-B23
MT-D14
MT-D13
MT-A19
MT-A17
MT-B8a
MT-A9
MT-D13
MT-A7
MT-B2
MT-A3
MT-D16
MT-D15
MT-A7
MT-B5
MT-A6
MT-D13
MT-A19
MT-D16
MT-A17
MT-D16
MT-B1
MT-B22
MT-A9a
MT-B22
MT-D15
MT-B22
MT-A7
MT-B8
MT-D16
MT-D13
MT-A20
MT-A21
MT-A3
MT-D15
MT-B2
MT-A7
MT-A6
MT-B5
MT-D15

NO.	SCHEMA	mm	Qté
BASE			
MT-B1		1156	x1
MT-B5		1156	x2
MT-A6		526	x2
MT-B22		1156	x3
MURS			
MT-B2		1156	x2
MT-A3		526	x2
MT-A7		580	x4
MT-B8		1154	x1
MT-B8a		1154	x1
MT-A9		524	x1
MT-A9a		524	x1
TOIT			
MT-B4		1220	x1
MT-B10		1220	x1
MT-B11		1220	x1
MT-A12		585	x1
MT-A12a		585	x1
MT-A19a		198	x2
MT-B23		1220	x3
AUTRES			
MT-D13			x4
MT-D14			x4
MT-D15			x4
MT-D16			x4
MT-A17			x2
MT-A19			x2
MT-A20			x1
MT-A21			x1
MT-A30			x1
MT-A31			x2
MT-B44			x100
CN-A33			x2

1

MT-B1 [x1]

MT-B22 [x3]

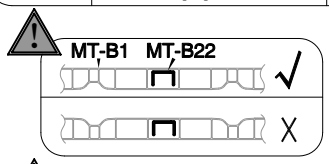

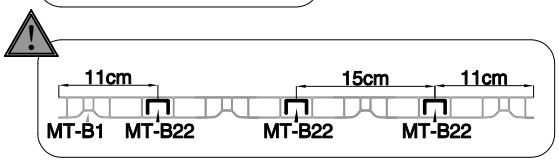

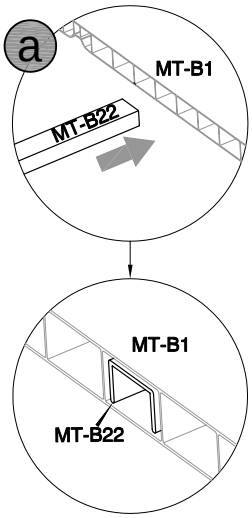

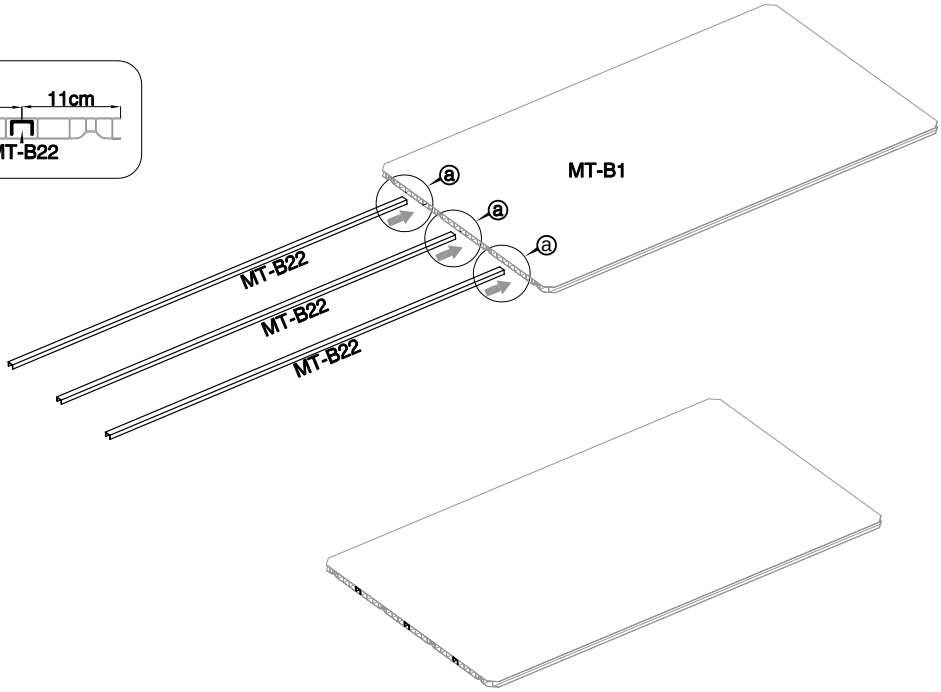

2

MT-B5 [x2]

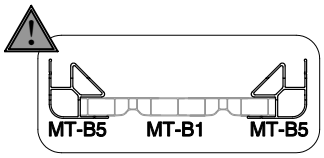

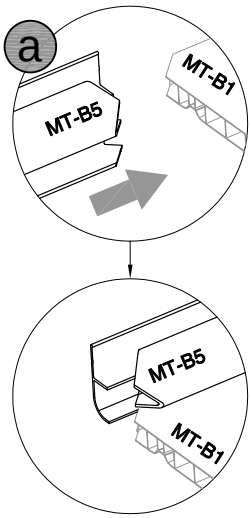

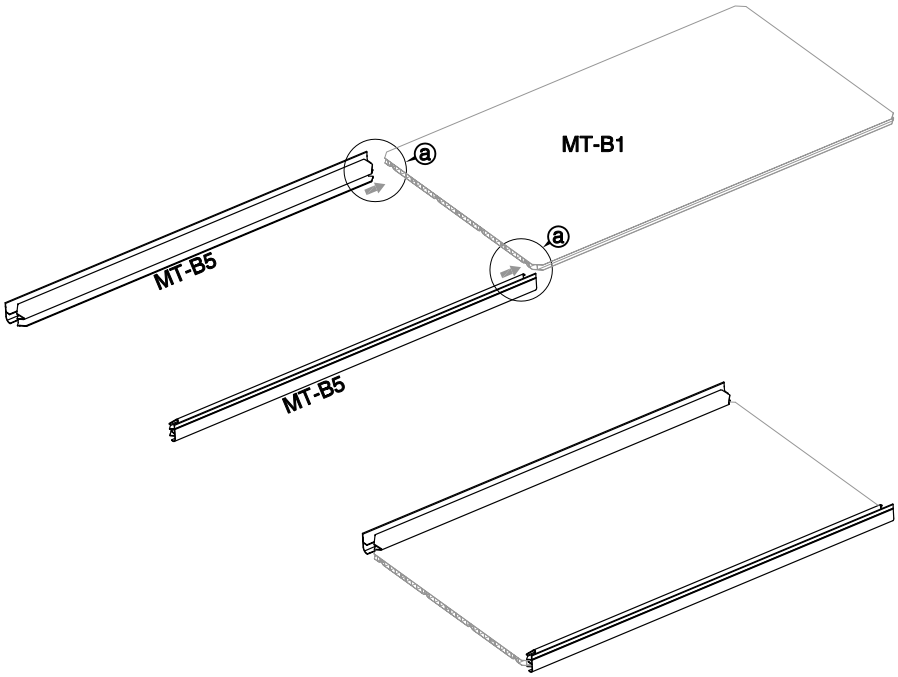

3

MT-A6 [x2]

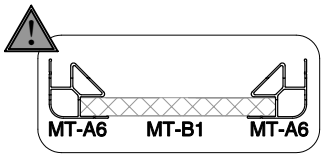

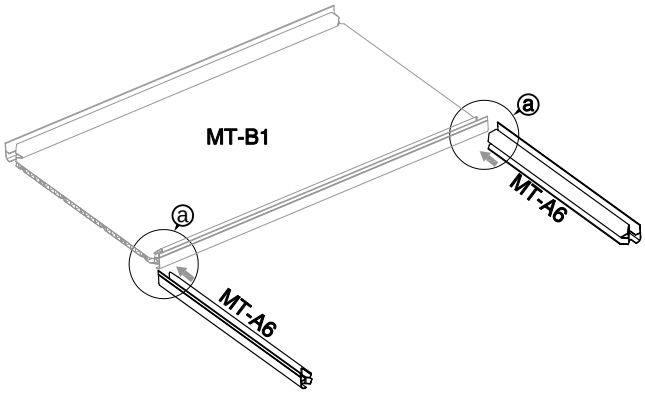

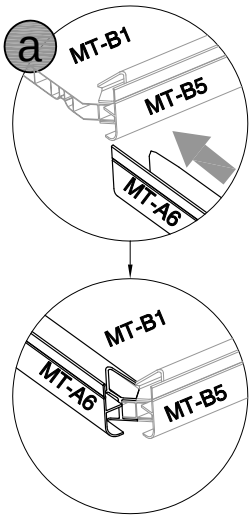

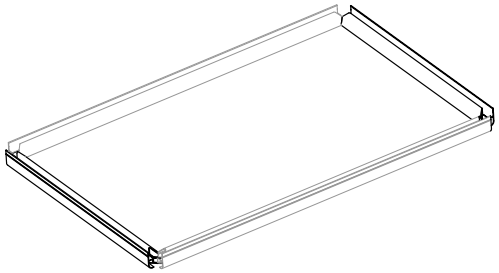

4

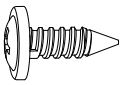

MT-B44 [x16]

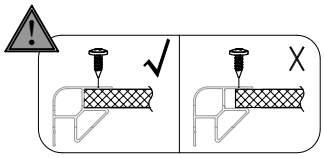

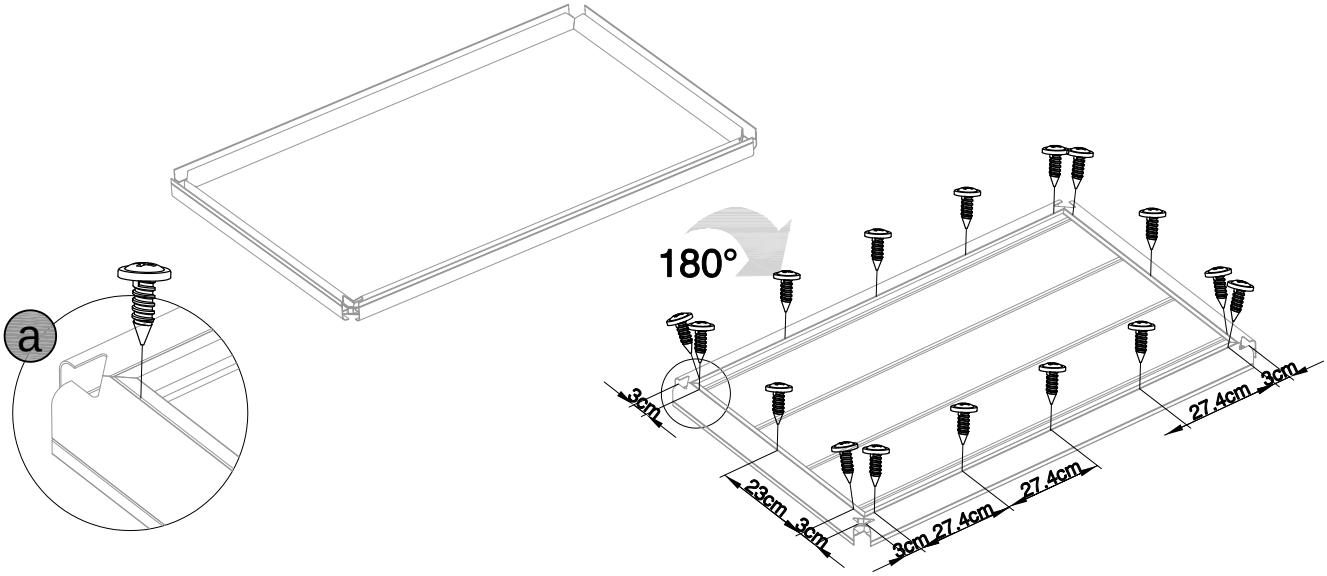

5			
	MT-A7 [x4]	MT-D15 [x4]	

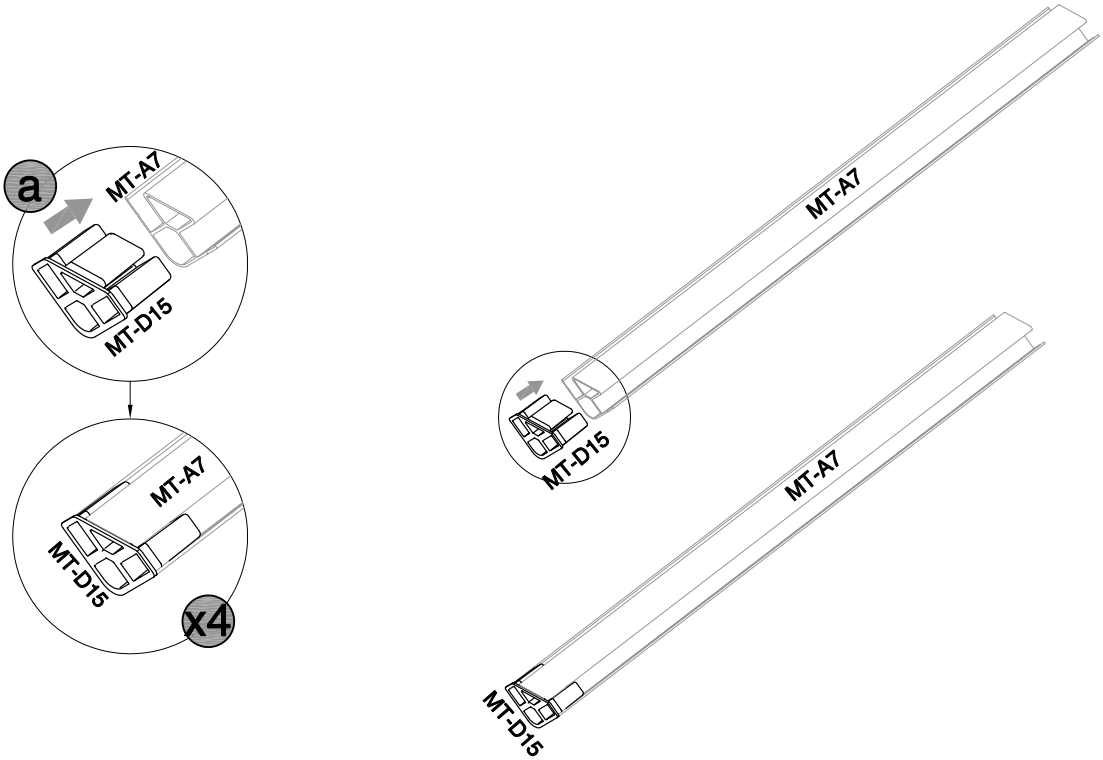

6		

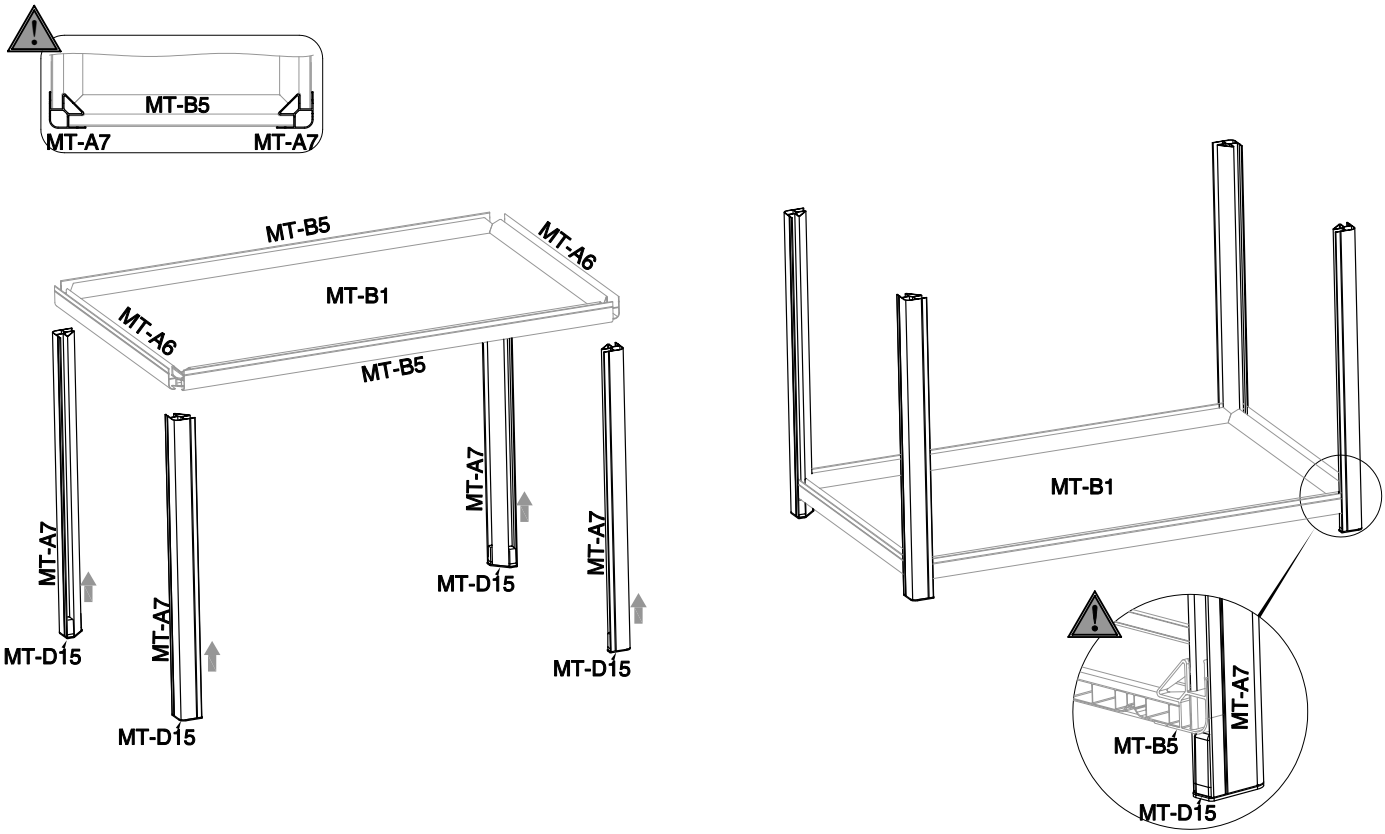

7

MT-B2 [x1]

CN-A33

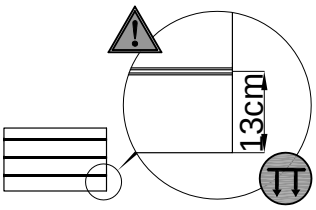

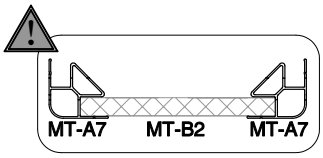

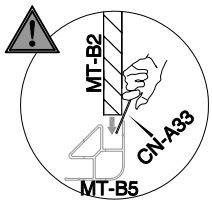

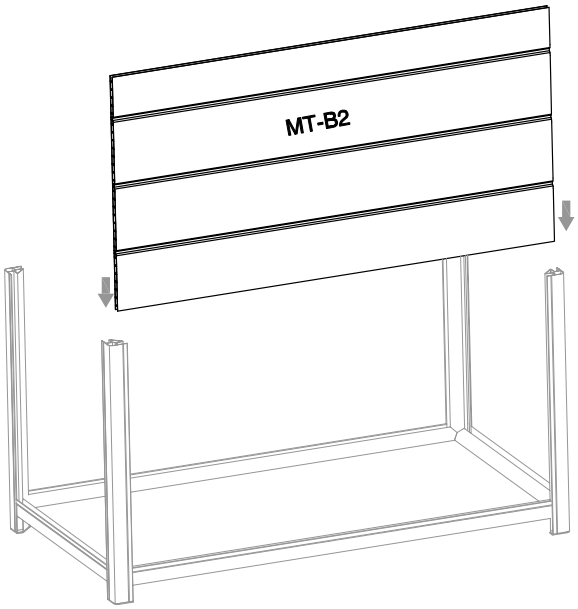

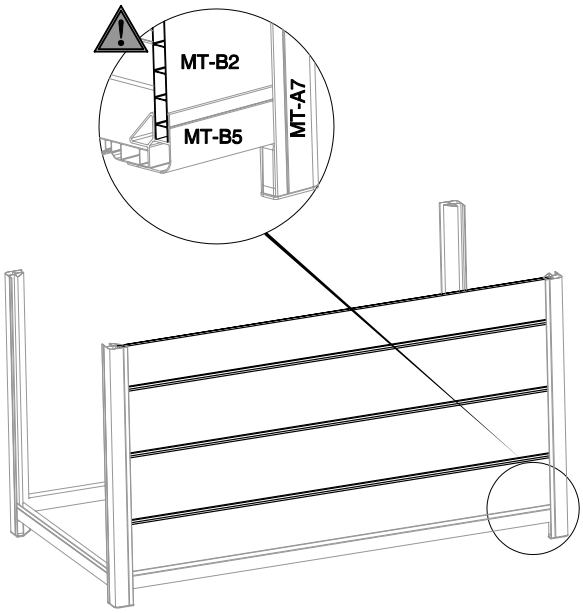

8

MT-B2 [x1]

MT-A3 [x2]

CN-A33

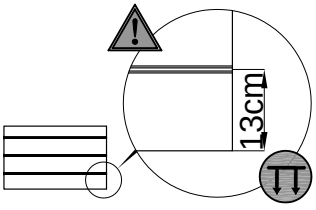

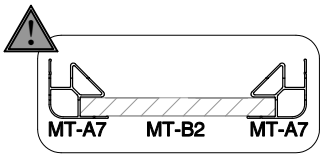

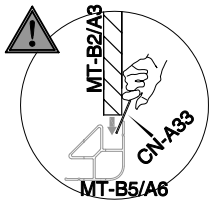

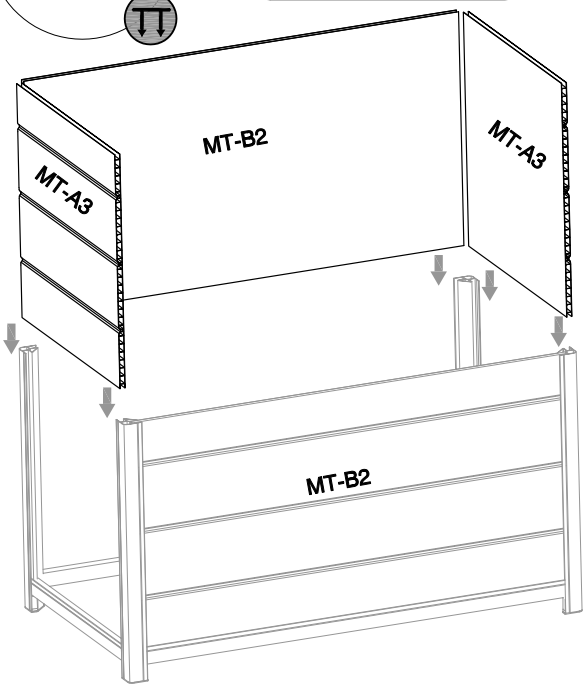

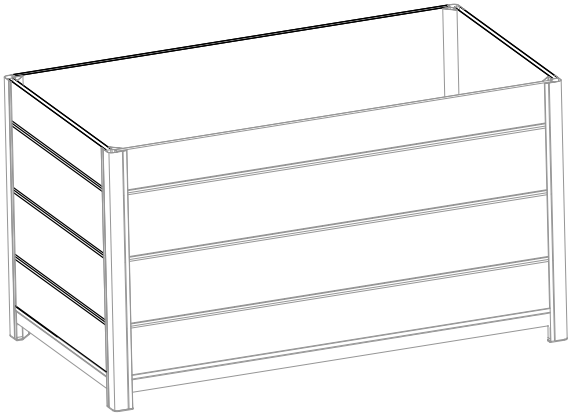

9	MT-B44 [x24]

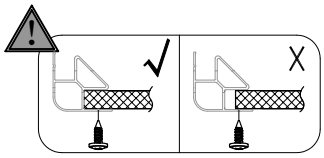

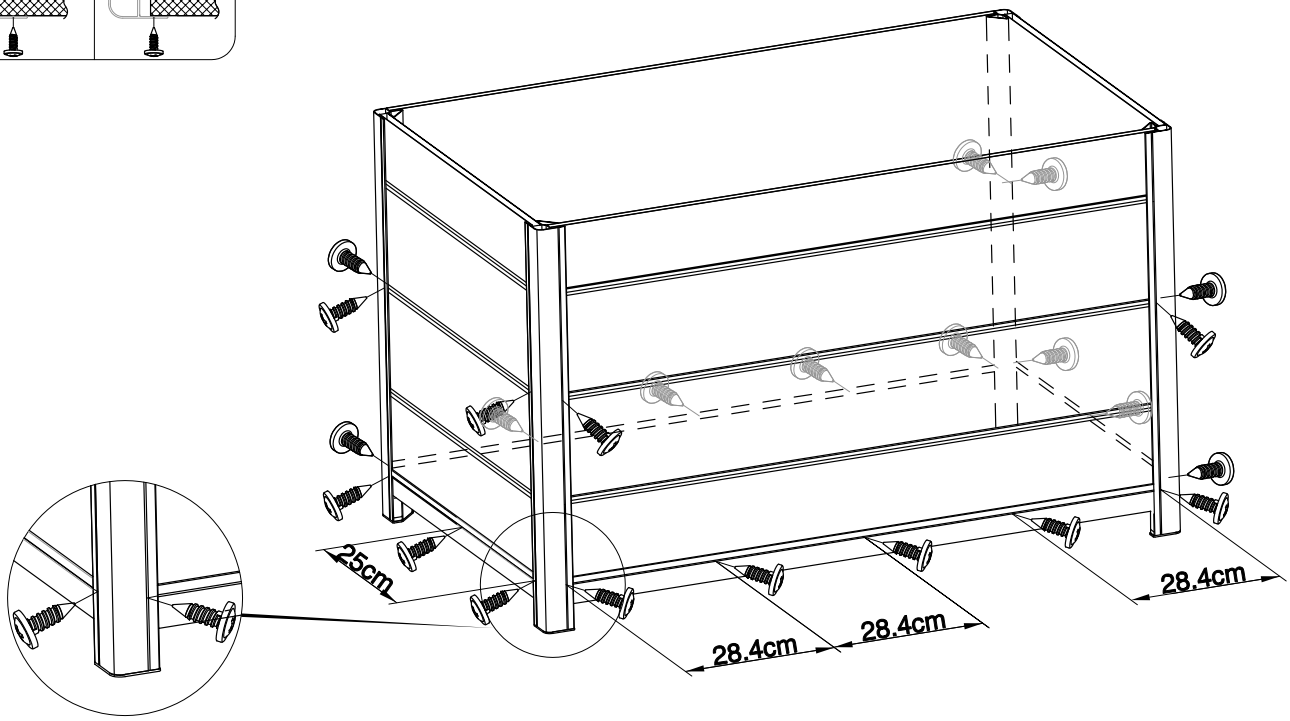

10	MT-B8 [x1]	CN-A33

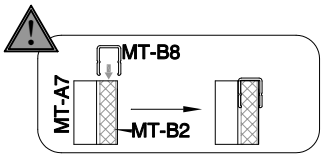

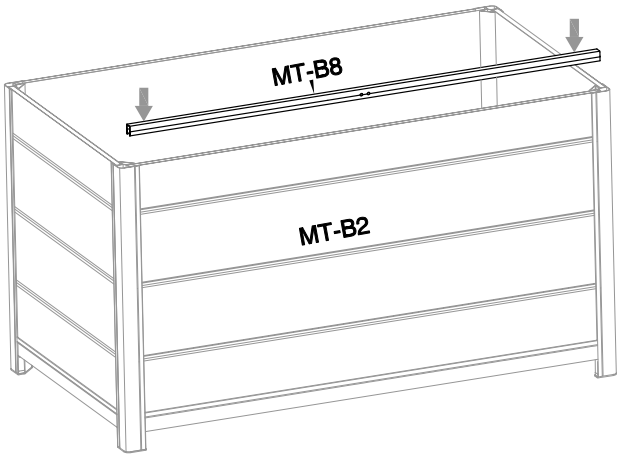

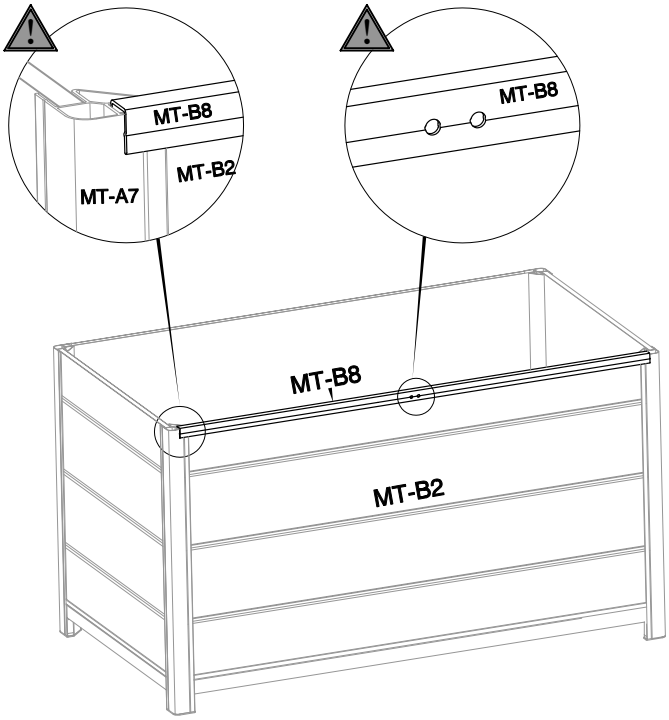

11

MT-B8a [x1]	MT-A9 [x1]	MT-A9a [x1]	CN-A33

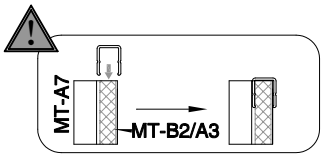

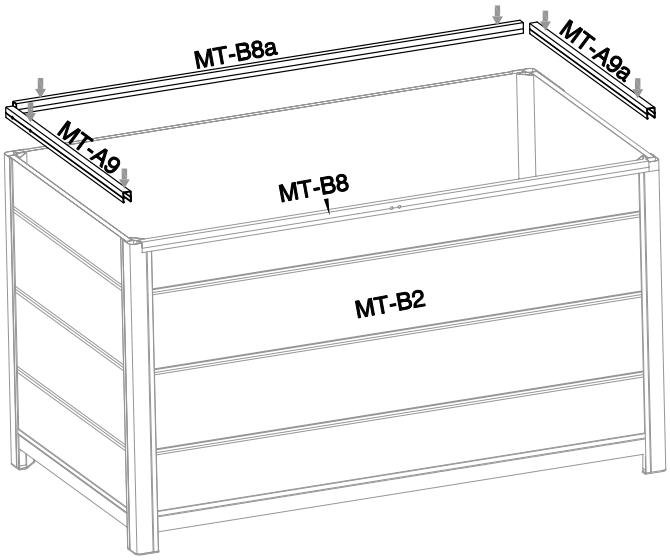

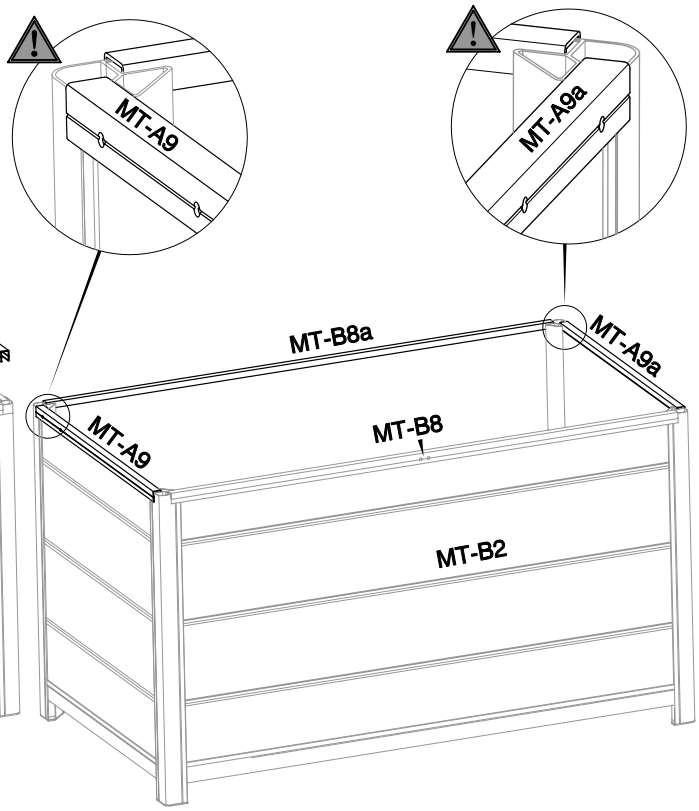

12

MT-D13 [x4]	MT-B44 [x12]

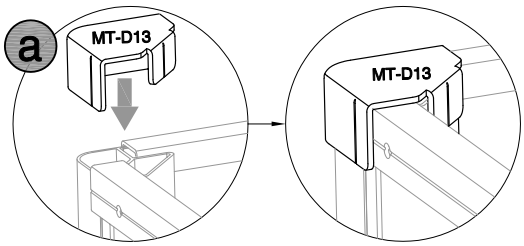

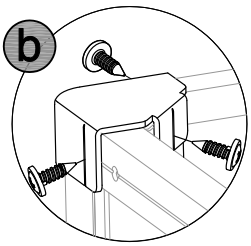

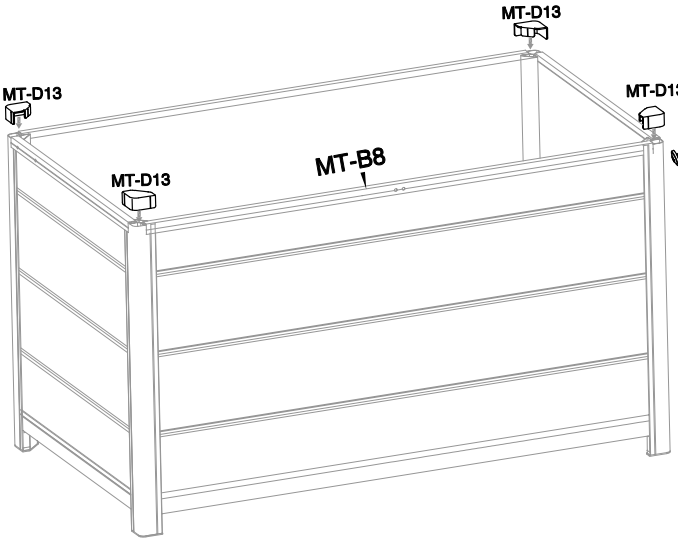

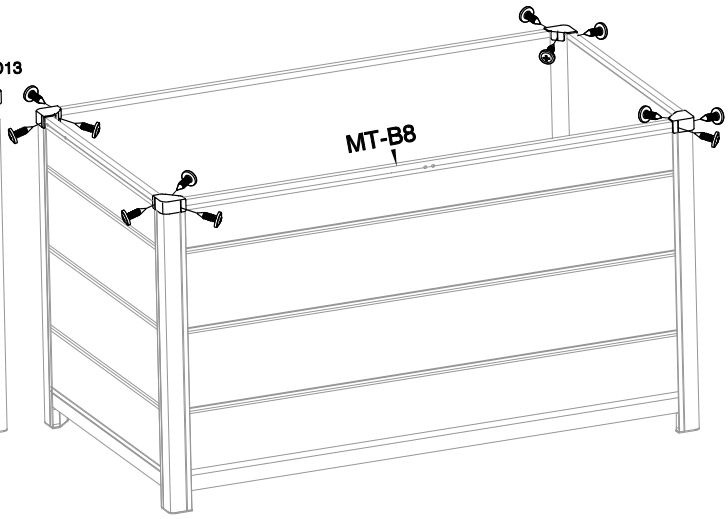

13			
	MT-D16 [x4]	MT-B44 [x12]	

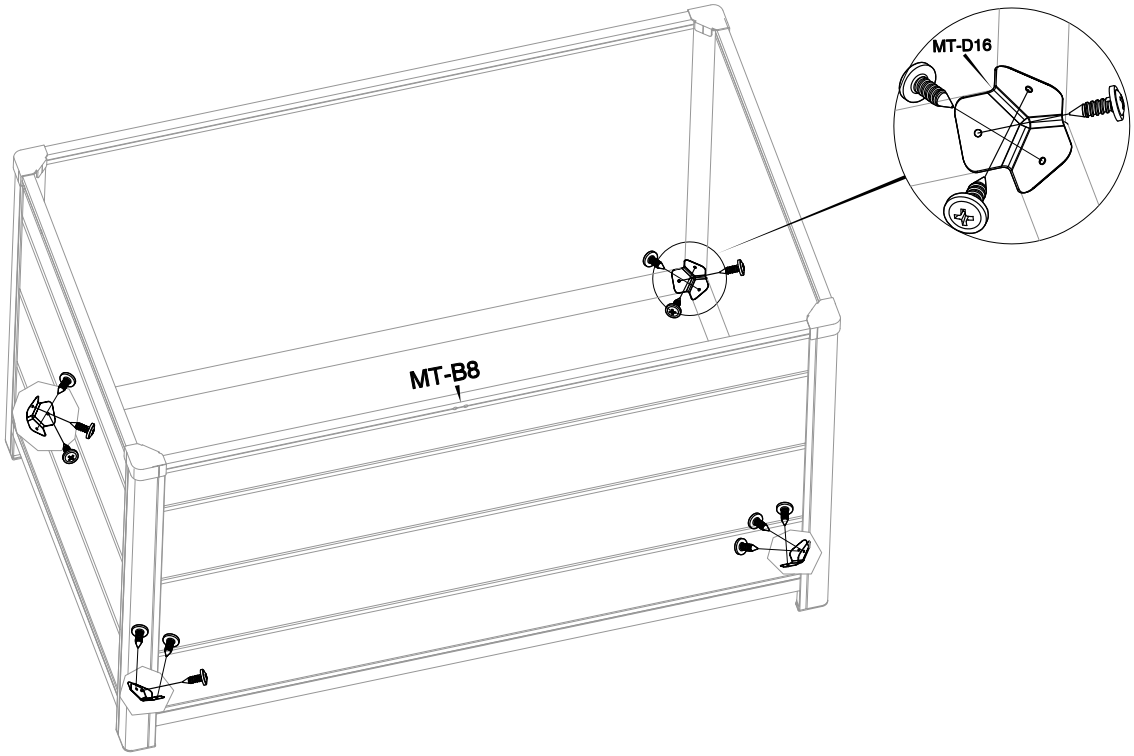

14			
	MT-A19 [x2]	CN-A33	

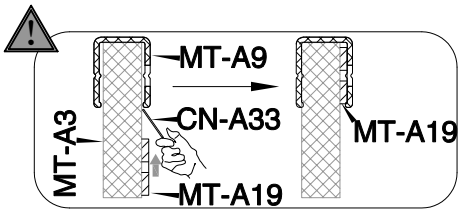

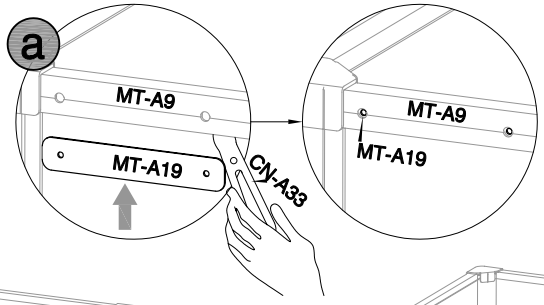

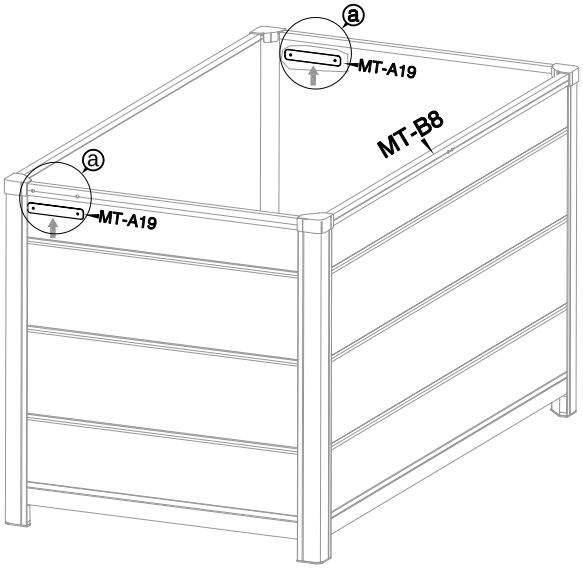

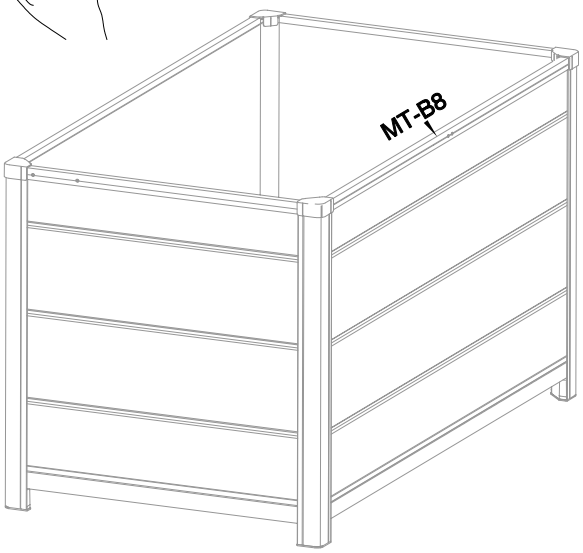

15

MT-A20 [x1]	CN-A33	MT-B44 [x2]

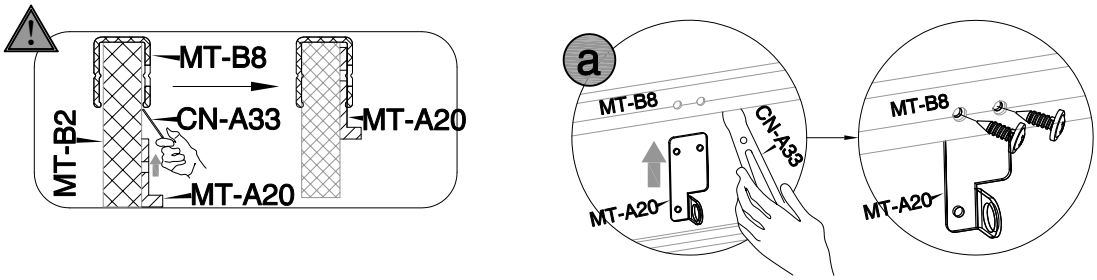

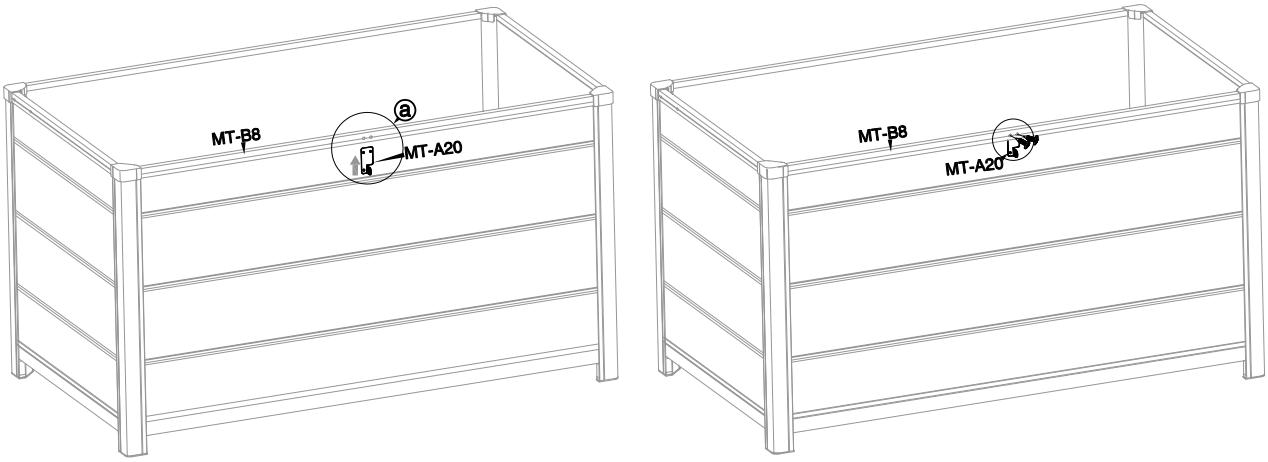

16

MT-B4 [x1]	MT-B23 [x3]	

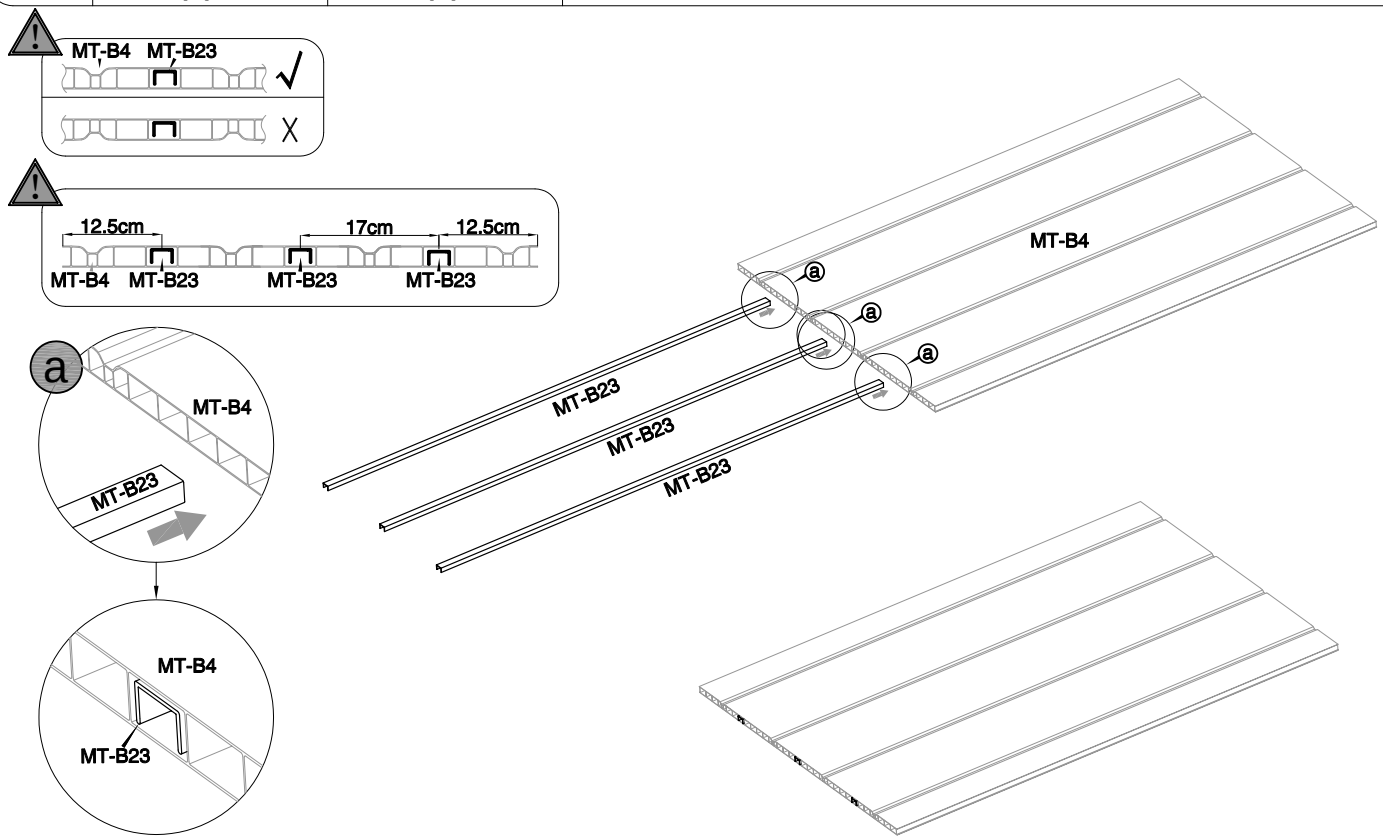

17					
	MT-A12 [x1]	MT-A19a [x1]	MT-A17 [x1]	MT-B44 [x2]	

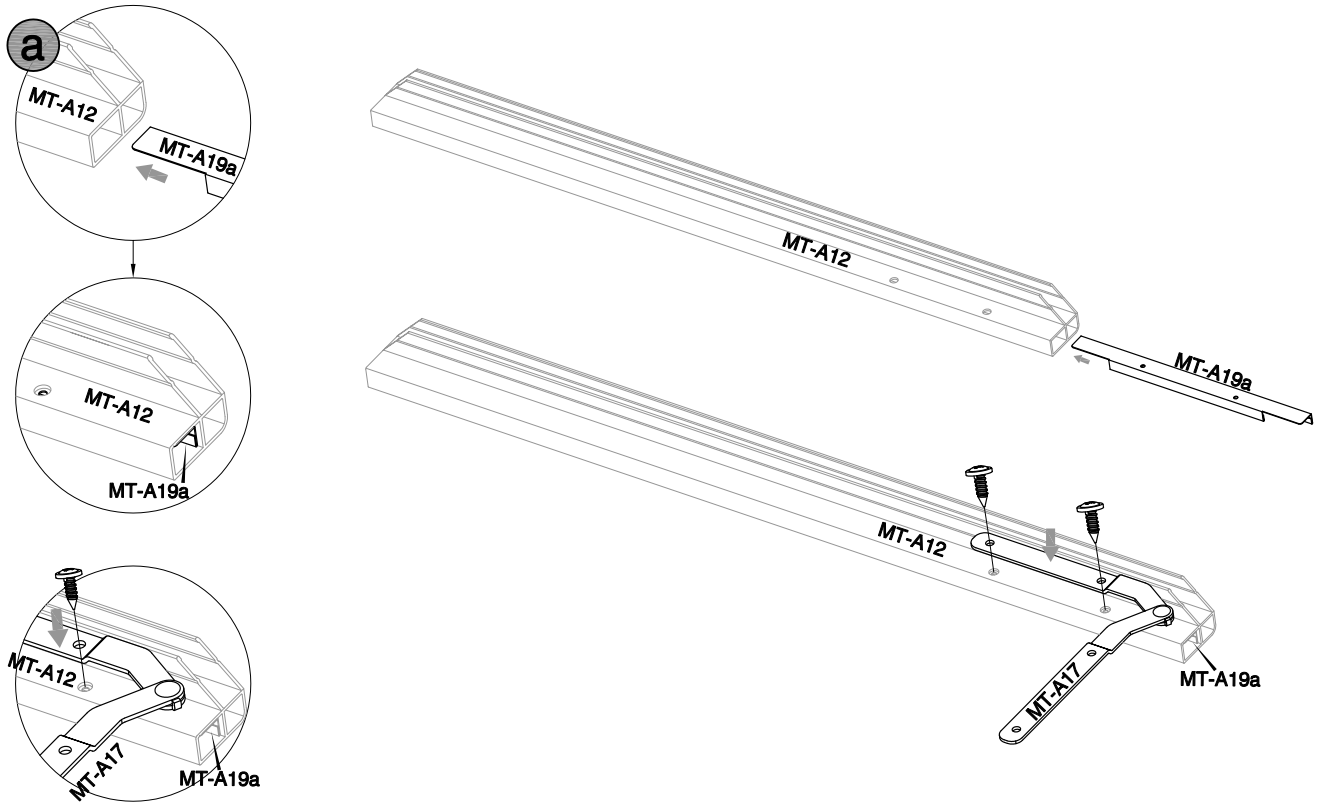

18					
	MT-A12a [x1]	MT-A19a [x1]	MT-A17 [x1]	MT-B44 [x2]	

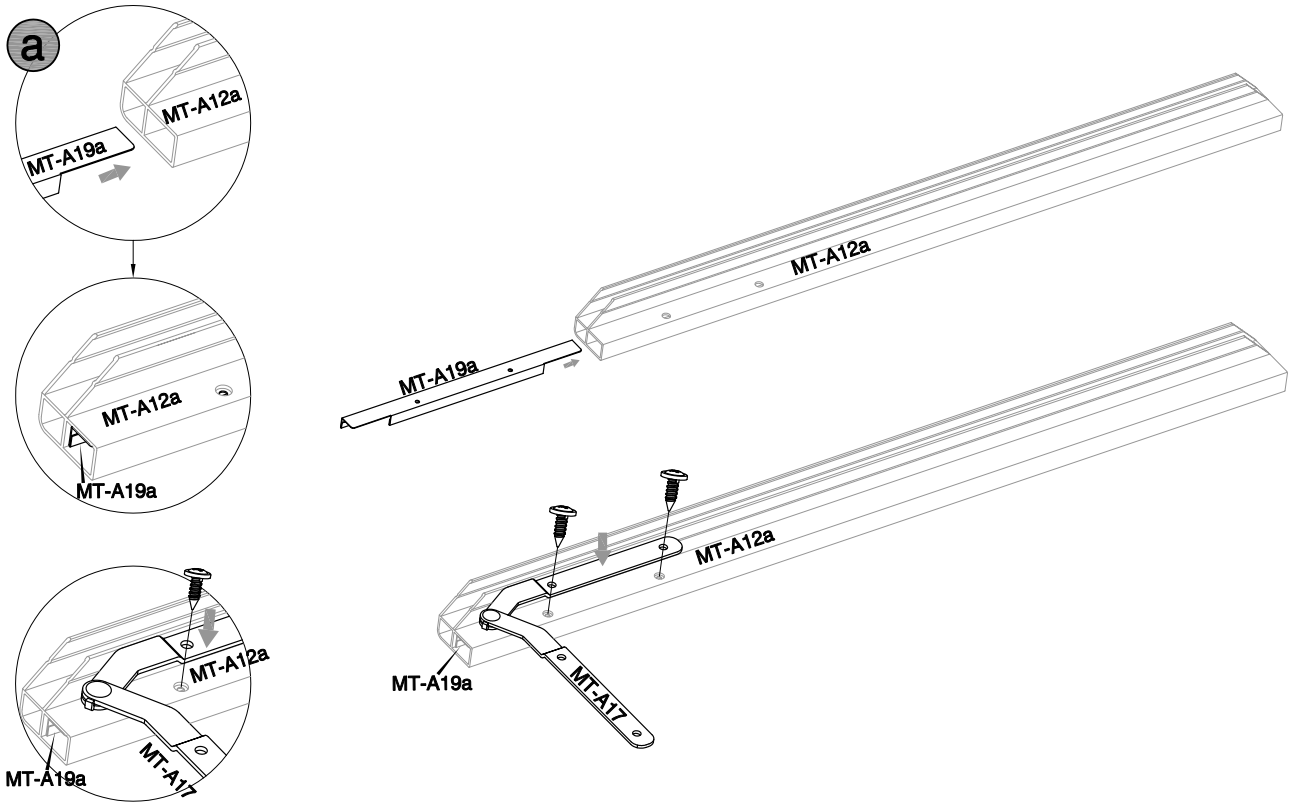

19			
	MT-B10 [x1]	MT-B11 [x1]	MT-B44 [x16]

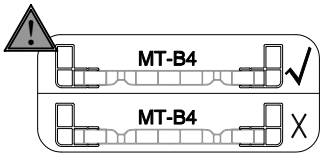

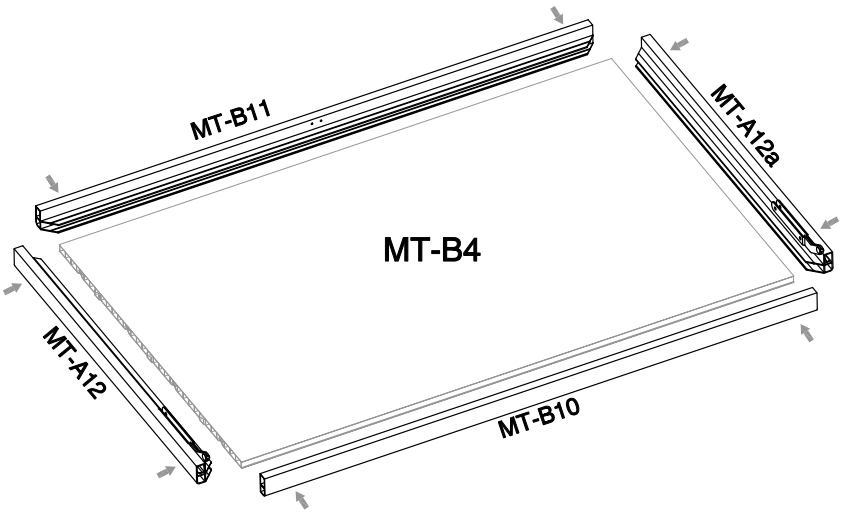

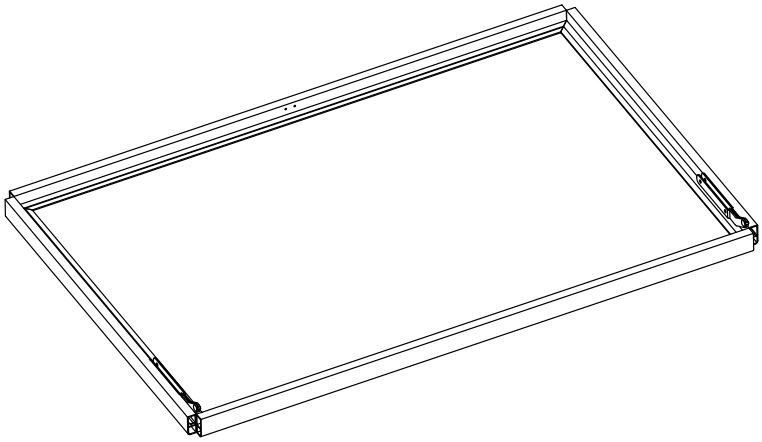

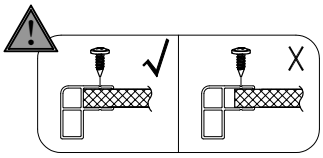

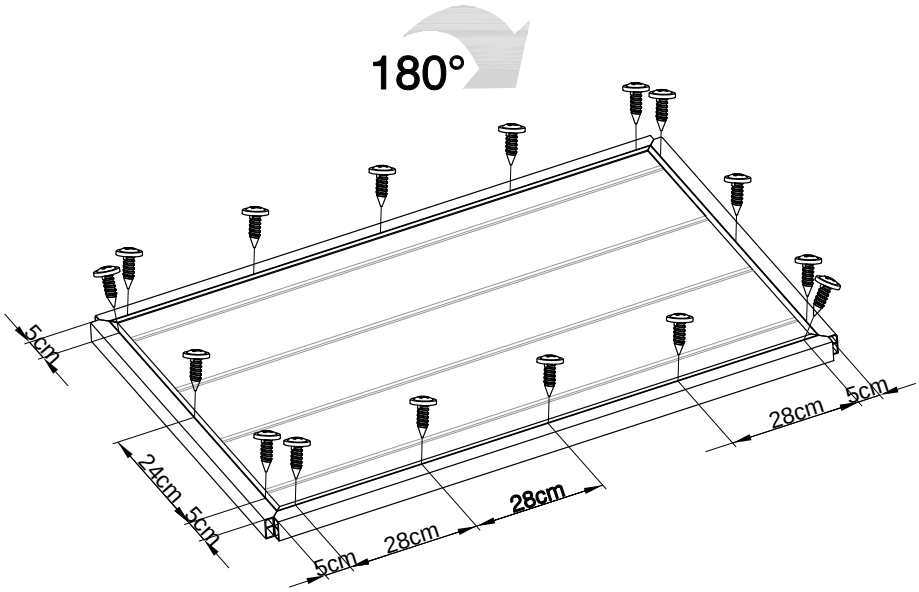

20			
	MT-D14 [x4]	MT-B44 [x8]	

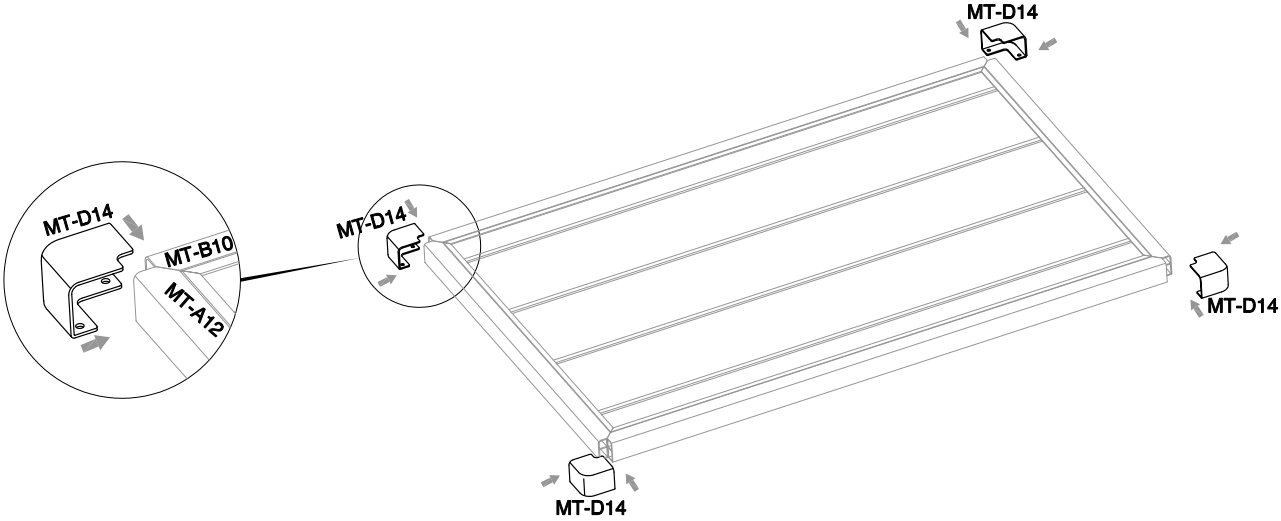

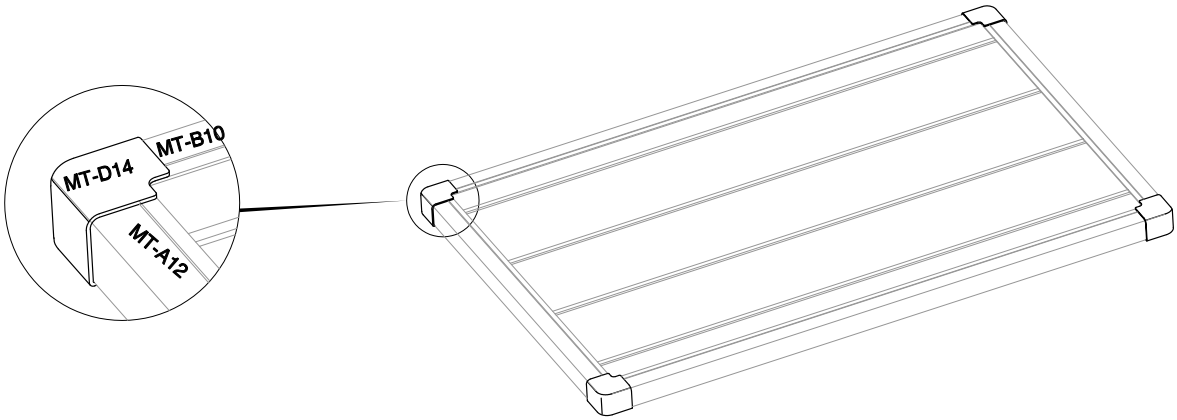

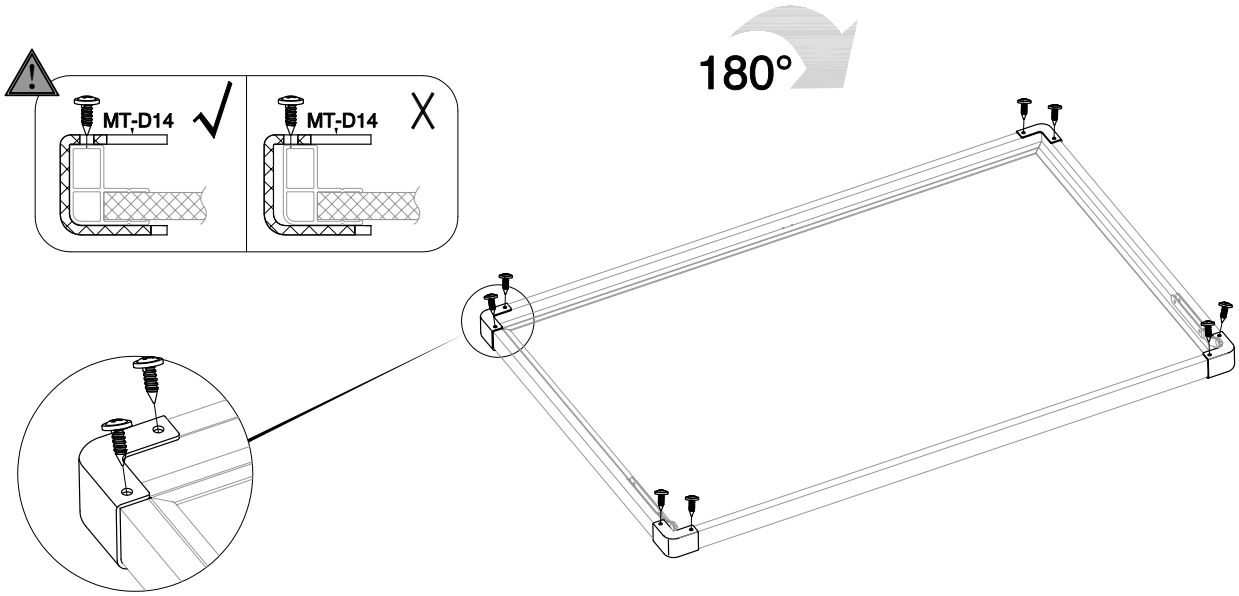

21		
	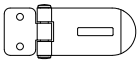 MT-A21 [x1]	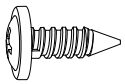 MT-B44 [x2]

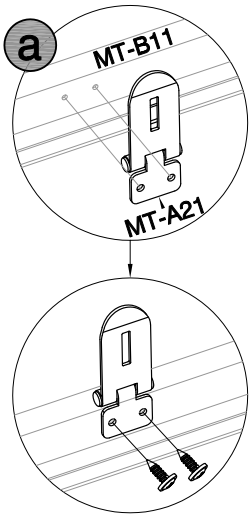

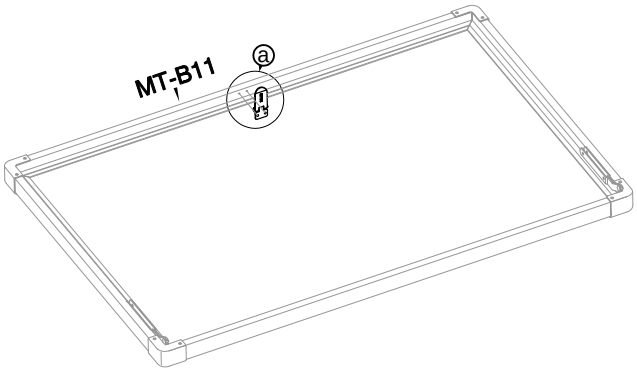

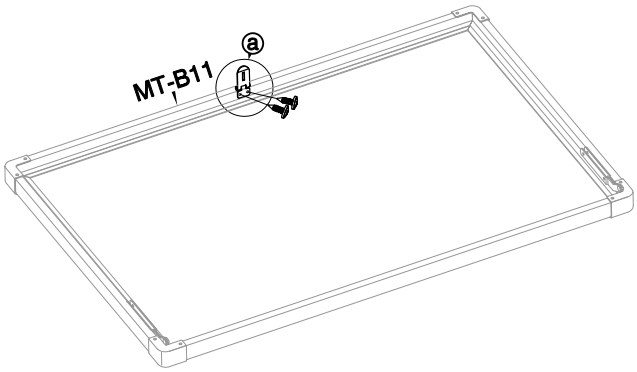

22		
	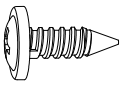 MT-B44 [x4]	

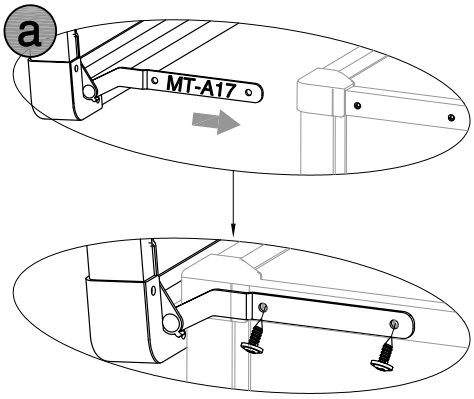

23	MT-A30 [x1]	MT-A31 [x2]	

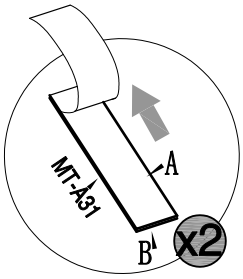

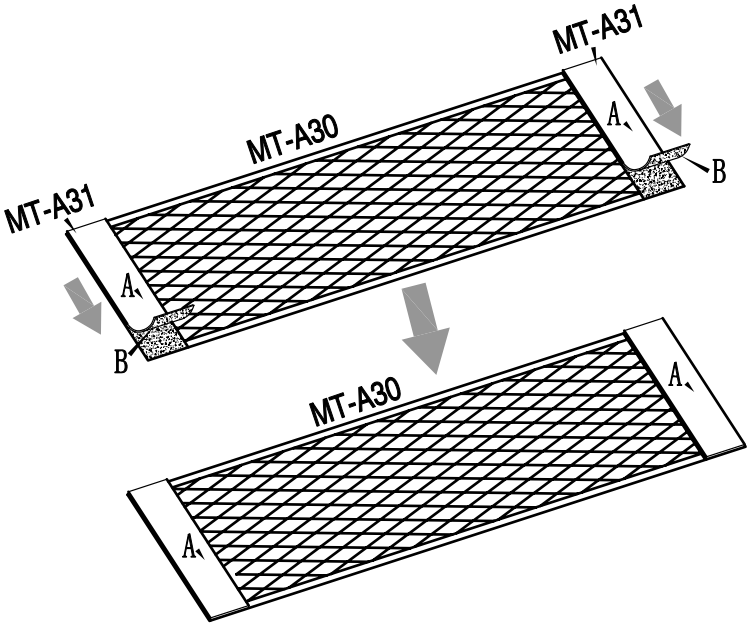

24		

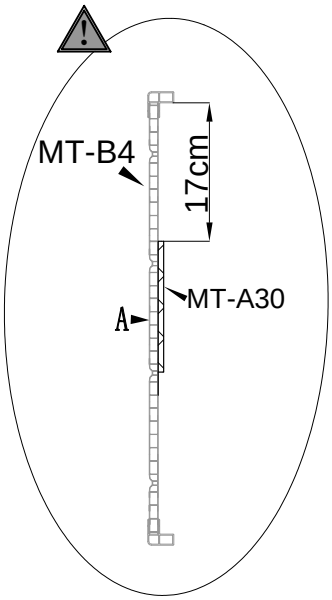

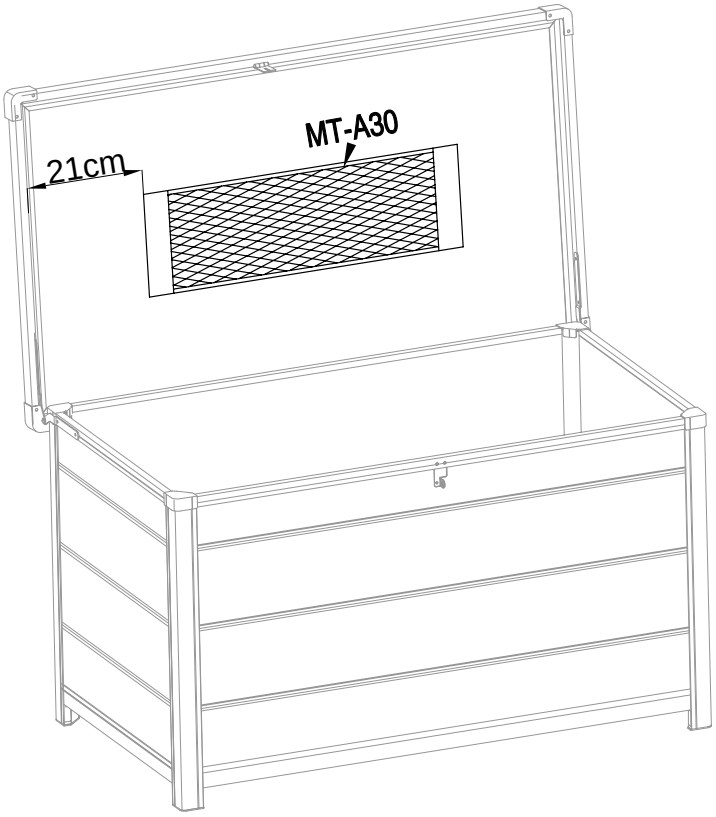
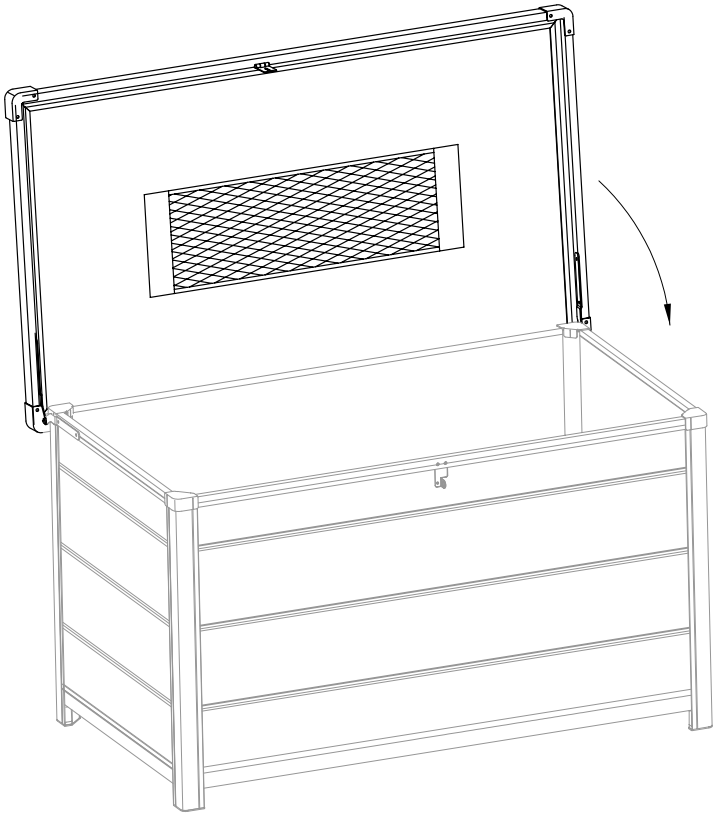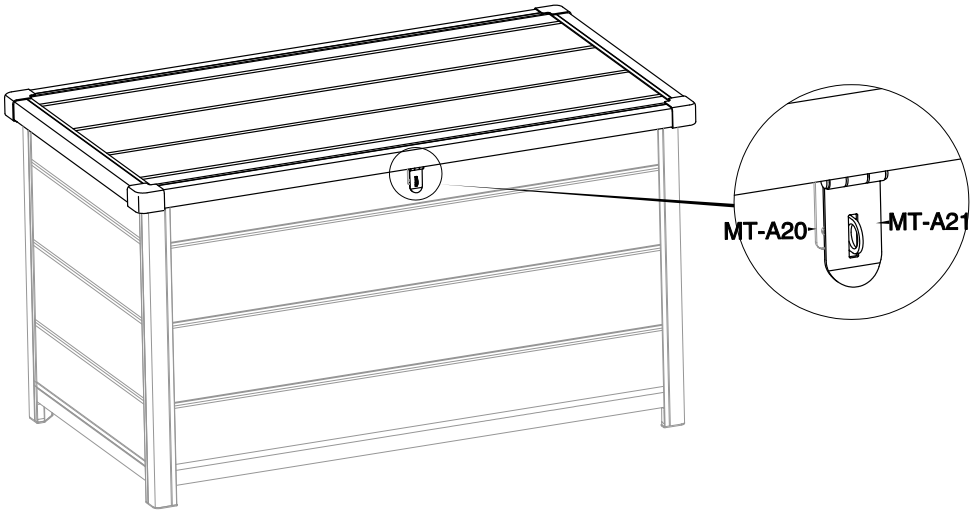
25